DocuSign Envelope ID: 4832F6CB-7910-4F07-BB66-D8AD5CC9DF82

5/14/99

DOCUMENT NOT CONSIDERED FINAL UNLESS ALL SIGNATURES COMPLETED

PROJECT REFERENCE NO.	SHEET NO.
17BP.11.R.145	UC-3B
DESIGNED BY: BCH	
DRAWN BY:	
CHECKED BY:	
APPROVED BY:	
REVISED:	
NORTH CAROLINA DEPARTMENT OF TRANSPORTATION	
UTILITIES ENGINEERING SEC. PHONE:(919)707-6690 FAX:(919)250-4151	UTILITY CONSTRUCTION PLANS ONLY

NORTH CAROLINA PROFESSIONAL SEAL 030499 ENGINEER BOBBY C HOUSER
DocuSigned by: Bobby Chad Houser 1/24/2022

UTILITY CONSTRUCTION

PROJECT TYPICAL DETAILS

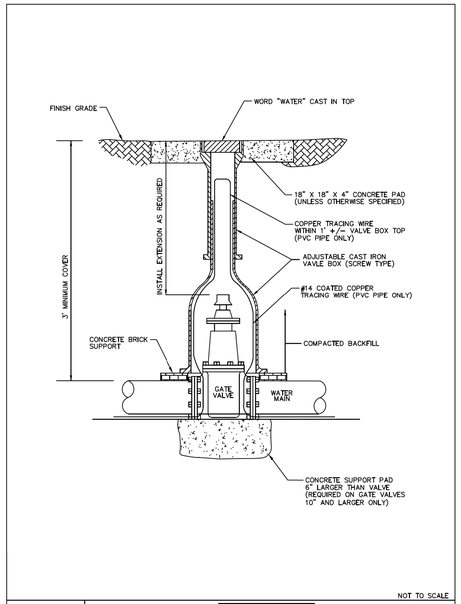

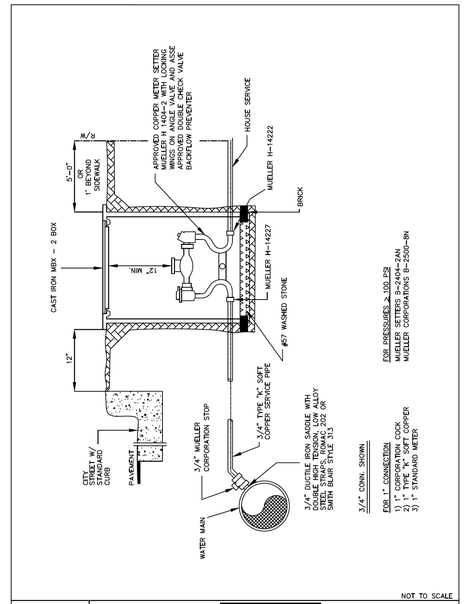

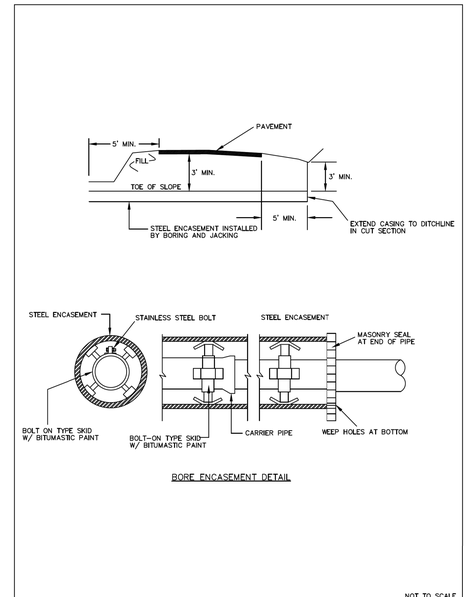

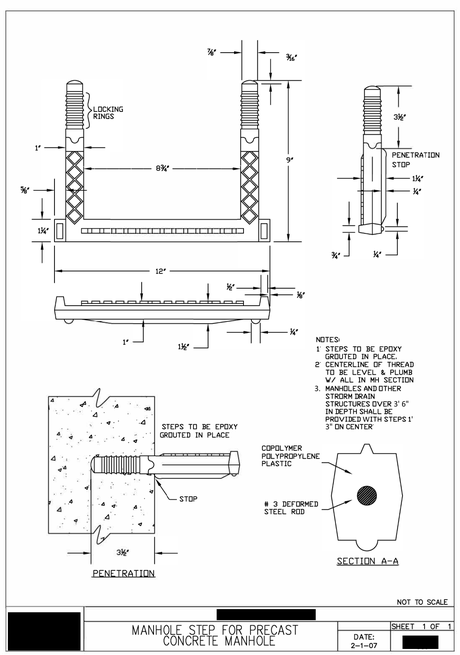

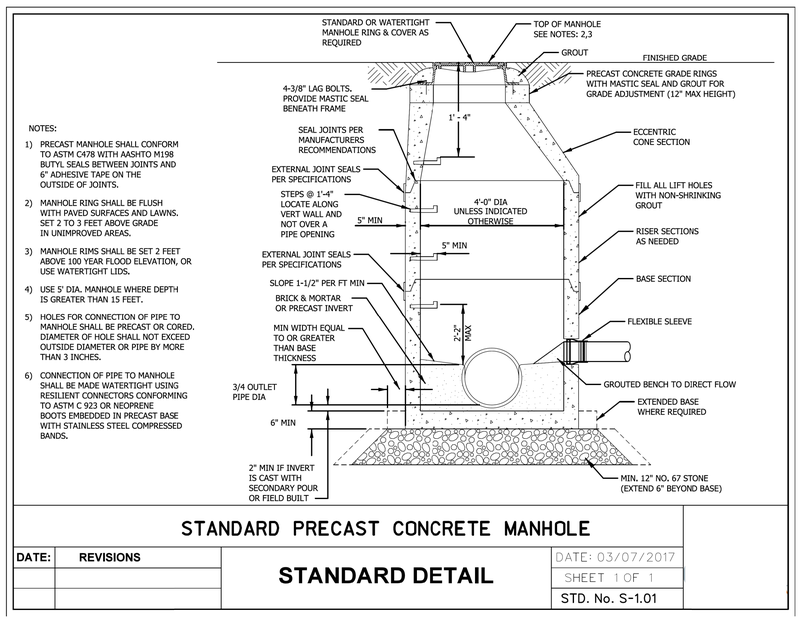

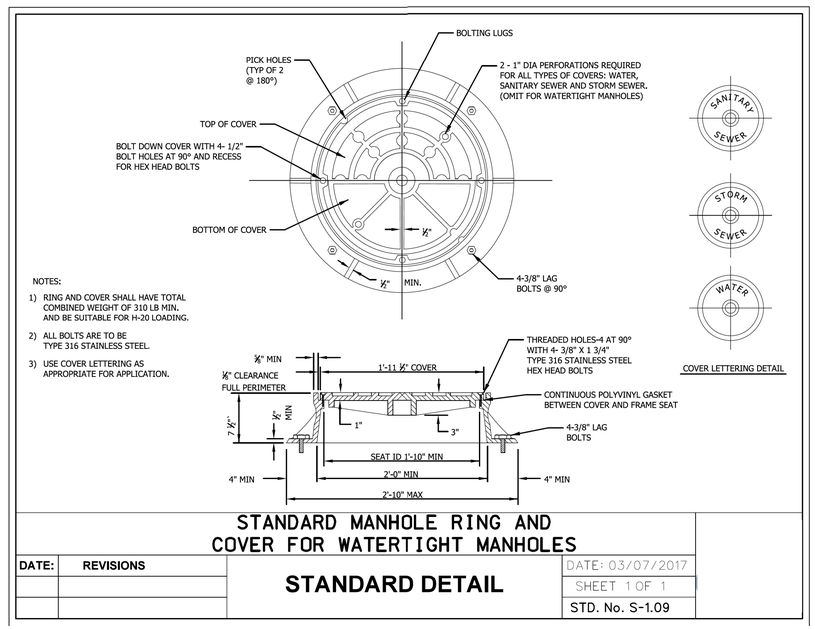

7/21/2021 10:10:45 AM
ne 273\Utility Engineering\UC\Proj\ASHE_273_Ut_notes_UC3.psh.dgn